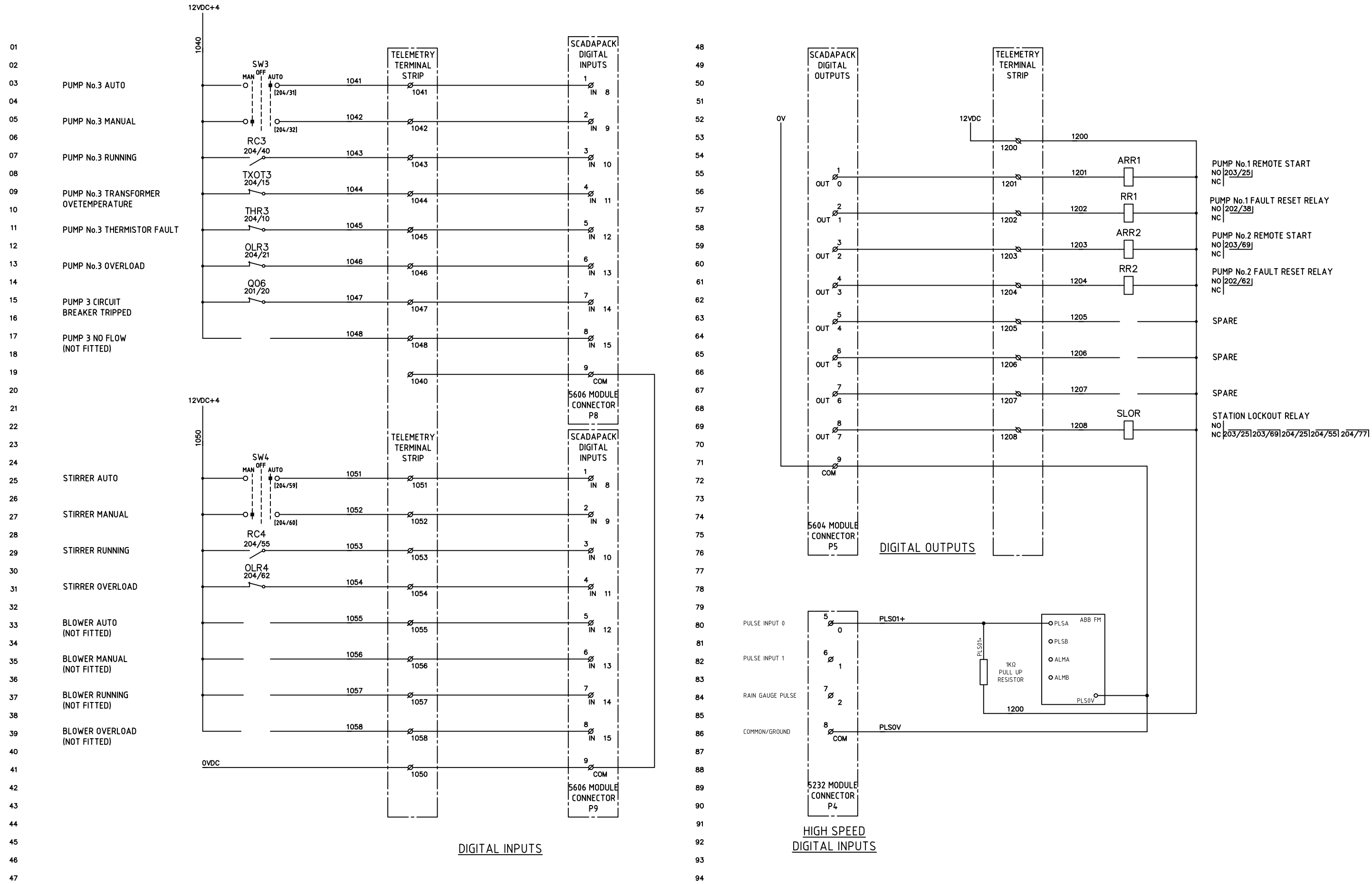

REV.	REVISION DETAILS	BY	CHECKED	APPROVED	DATE

DRAWN	VAIS
DATE	18 Oct 2010
DESIGNED	
DWG CHECKED	
PROJECT MGR.	M Wyzenbeek
ELEC. DIRECTOR	
SCALE:	NTS
SHEET SIZE:	A3

Victorian Automation & Integration Services
3 Copeworth Court
Alfredton VIC 3350
Ph (03) 53376653
www.vais.com.au

TITLE:
Westernport Water Newhaven Sewer Pump Station
Single Line Diagram

Client Dwg No: E206

PROJECT ID: 09039-009

SHT No: 1

REV: 1.0